SPC/Fisheries 9/WP.25
17 January 1977

ORIGINAL : ENGLISH

SOUTH PACIFIC COMMISSION

NINTH REGIONAL TECHNICAL MEETING ON FISHERIES
(Noumea, New Caledonia, 24 - 28 January 1977)

OUTER REEF FISHERY IN WESTERN SAMOA

by

Oyvind Gulbrandsen
FAO Fisheries Adviser
Department of Agriculture,
Forests and Fisheries
P.O. Box 206
Apia, Western Samoa

1. INTRODUCTION

Although handlining at depth of 20-50 fathoms has been known for a very long time in Samoa, trolling for tuna has remained the main fishing method of the motorized canoes operating outside the reef. Trolling has the advantage of low investment in fishing gear, the technique is fairly uncomplicated it is more exciting and fun and from time to time very good catches are obtained. However, there are often periods with little or no tuna and to assure the profitability of the motorized boats it is essential to have an alternative fishing method. Handlining remains at present the only alternative that can substantially increase the catch landed by village fishing boats.

One of the first obstacles to be cleared away was the lack of suitable fishing gear at a reasonable price. In 1975 the Government established an "Agricultural Store" which also carries a stock of lines, hooks and rope necessary for deep bottom handlining.

The second step was to provide boats that would be seaworthy enough to stay out for night fishing and give a reasonable comfort in the squally conditions often encountered in Samoa. This required establishment of a boatbuilding yard together with necessary finance. A village Fisheries Project prepared in 1974, approved by Danish Aid and FAO in 1975, and started operation in beginning of 1976.

2. DEMONSTRATION TEAM

The third step was to convincingly demonstrate the boats and new techniques of bottom handlining to fishermen in the villages. A Demonstration Team consisting of two boats with outboard motors and each manned with a Leading Fisherman and a crew member from the Fisheries Division started operation in November 1975 with the following objectives:

i) Demonstrate new boats and fishing techniques

ii) Test Fishermen as a basis for selection of candidates to the Hire/Purchase Scheme for boats.

iii) Obtain reliable catch records.

During a 11 month period, the Demonstration Team visited 27 villages and took 540 Fishermen out on night fishing. Altogether 108 fishing trips yielded a catch of 16,7 tons (36,800lb). The Demonstration Team has shown that a 28ft boat with an experienced crew can achieve a yearly catch of 10 tons with about 115 trips per year, and an average catch of

87 kg (190lb) per trip. At present the average catch per fishing unit is in the region of 4 tons per year. More emphasize on bottom handlining, should raise the average catch of village fishing units substantially.

As a result of the work of the Demonstration Team, 50 orders for boatshad been placed by the end of 1976. Although the boatyard can deliver one 28ft boat per week, the delivery time is now 5 months and it was therefore decided not to carry on with further demonstration fishing and concentrate on training of fishermen for the new boats.

3. EQUIPMENT

3.1 Boats:

Fig. 1 and 2 shows the two types of boats now being built. At the end of 1976 nineteen boats of the "Alia" (catamaran) type had been delivered and six of the diesel powered boat . The boats are delivered fully equipped and Appendix I gives a list of the gear that is included. The outboard powered boat is also fitted out with a spare engine of 5hp. The Alia is a further development of the local type double hull canoe using pressure treated, marine plywood as construction material. With increased freeboard and distance from the bow to the bridge, the performance in rough sea has been very much improved. Since trolling for tuna remains an important fishing method the achievement of a good turn of speed with moderate power has been the aim of the design. The catamaran design is superior to other hull shapes for an intermediate speed from 10 to 15 knots, that is above displacement speed but below planing speed. The 28ft Alia with a 25hp outboard engine achieves a speed of 13 knots in calm condition with 5 men onboard. The 28ft. diesel powered boat has a speed of speed of around 9 knots with the 20 hp diesel engine.

3.2 Gear:

Fig. 3 shows the terminal gear now mostly used. Experiments with a type of terminal rig used for snapper fishing in the Gulf of Mexico showed that although at times superiour to the rig showed in Fig. 3, the use of monofilament instead of wire leaders lead to loss of gear when sharks took the bait, and even more important, the loss of the shark itself. In the Gulf of Mexico sharks are not appreciated and the fishermen there rather prefer to let the shark go than wasting time hauling it.

The main line is 105 kg (230 lbs) monofilament, usually of a longthof 500 m. (275 fathom). To save work of hauling in more than 200m (100 fathoms) line and to avoid tangles which inevitably occurs when the line is coiled in the bottom of the boat, a locally made fishing reel is used. Fig. 4 gives the constructional details. The reel is as simple as possible without a brake, but has proven adequate for the job. The specialised reels produced in Florida for snapper fishing are too expensive for general use in a village fishery (4 reels would cost as much as an outboard motor).

The same applies to the use of stainless steel wire for the main line. Although undoubtedly more effective in feeling the fish at depth of 200 m (100 fathoms) or more, the initial cost is prohibitive. However we considered the investment in stainless steel wire worthwhile for the more professional fishermen.

3.3 Methods:

The main problem in bottom handling is the location of good fishing spots at the drop off of the outer reef, which occurs in depth of 100 - 150 m (50-80 fathoms). Without an echosounder this is a hit and miss operation, trying out the depth with the handline. Here again the echosounder is considered a too expensive item for the average village fisherman, but certainly worth the investment for the more active type of fisherman. A portable, echo sounder with 75 soundings per minute and a theoretical range down to 600 m. (320 fathoms) has proven satisfactory. The practical depth range is however not more than 250 m. (140 fathoms) but this is sufficient to locate the drop off at the outer reef.

Fishing is always done by anchoring. Currents around the Samoa Islands are generally too strong to permit drift fishing. The anchor and the method for towing the anchor is shown in Fig. 5 The towing of the anchor when shifting from one fishing spot to another, was first introduced by an FAO master fisherman from Florida and has proven a sweat saver. The effort of hand hauling an anchor from 200 m. (100 fathoms) depth previously meant that very little shifting of fishing spots took place even when the fish was not biting. The towing of the anchor is now widely practiced and this together with the use of a buoy for the final retrieval of the anchor, has with simple means taken a lot of the hard work out of bottom fishing.

Bait used is mainly fresh skipjack tuna caught by trolling on the way out to the fishing ground although atule (silver scad) is considered superior. Octopus is not as good as skipjack but used when nothing else is available.

Due to lack of refrigeration in the villages the dependance on the capture of tuna for bait, puts severe limitation on the fishing at times. A marketing project including the supply of ice and freezer units to the main fishing centers might improve this situation although it is expected that most fishermen will take the chance of catching bait on the run out to the fishing grounds rather than buy fish for bait.

4. MARKETING

Fish is presently given away or sold in the village. For larger catches, a pick up truck is hired to bring the catch to neighbouring villages or to Apia. Except for some few trading stores with small freezers, no refrigeration is used.

The Fisheries Division is now starting up a Fish Marketing Scheme which will consist of the following elements:

(i) A Fish buyer authorized by the Fisheries Division will be selected in each district. He will buy fish from the Fishermen at a fixed price determined by the Fisheries Division. The Fish buyer will store fish on ice in insulated 44 gal. drums (Fig. 6) He will provide his own transport and is free to sell his fish where he wants but will find it convienient to sell larger quantities at the Fish Market. He will buy flake ice from the Fish Market.

(ii) A Fish Market on each of the two islands initially operated by the Fisheries Division. The Fish market will have flakeice machines with a capacity of 2 tons/24 hours, a freezer and a fish shop and will buy and sell fish at a fixed price.

The system above attempts to combine the flexibility of the individual fish trader with the required Government control in order to safeguard the fishermen and the consumer. The Fish buyer will receive assistance from the FAO/DANIDA Village Fisheries Project in setting up his business. He will on a hire/purchase basis receive 8 insulated drums, a scale, a cashbox and WS$200 in working capital. In case of misuse, the right of being a fishbuyer will be given to another person in the same district.

Fish up to 12kg (30 lbs) is generally sold whole with heads and guts. Sharks and larger fish are cut up and sold in pieces. Highest price is fetched for fish of 1 - 5kg (2-10 lbs) which can be cooked and eaten by a small family. The selling price at the Apia Market are now around WS$0.90/kg (WS$0.40/lb) although large variations occurs with fluctuations in the supply.

FISH SPECIES

The list in Appendix II gives the main species caught in bottom fishing, listed in order of importance by weight Shark consitutes 32% of the total catch. Poisenous fish is not a major problem and Mu (Lutjanus bohar) which is the only specie known to be poisenous constitutes only 5% of the total catch.

6. RESOURCE

Data that can form a basis for resource evaluation of the "outer reef" in Pacific Islands are practically non existant. Some data exists on snapper and grouper fishing in the Carribean where the potential yield is estimated to 2-10 kg/ha (Gulland 1970). Average catch per effort based on the UNDP/FAO Carribean Fishery Development Project was 6.8 kg/reel-hour. The catches achieved by bottom fishing in Samoan waters are about 3 kg/reel hour. Whether this indicates half the potential catch per area is uncertain. Applying a figure of 0.5 tons/sq.km (5 kg/ha) and a shelf area of 2,000 sq km for Samoa, a yearly potential catch of 1000 tons is estimated. This is only a guess but it does provide an order of magnitude. With an average yearly catch of 6 tons per boat and 4 tons of this from bottom fishing this indicates an upper limit of 250 boats. Due to the uncertainty of the data some care must be exercised after the number of boats actively bottom fishing has passed 150.

Practically all bottom fishing in Samoa is carried out on the drop off of the "outer reef" where a combination of upwelling and hiding places creates a specially favourable habitat for fish. It is questionable to what extent the area between the "outer reef" and the coast contributes to the abundance of demersal fish. Applying a yield figure based on this whole shelf area could be much in error. Probably more correct would be to measure the length of the "outer reef" along the 50 fathoms curve and apply a yield figure per km. (mile) of reef length.

APPENDIX I

FAO/DANIDA VILLAGE FISHERIES PROJECT
FISHING GEAR DELIVERED WITH EACH BOAT

ITEM *	QUANTITY	UNIT PRICE WS$	AMOUNT WS$
Nylon monofilament fishing line No. 100, 230 lb breaking strain supplied in coil of 500 m, 275 fath) colour: clear	4	7.50	30.00
Nylon monofilament fishing line No. 60 120 lbs breaking strain, supplied in coil of 50m (16 fath.) color: clear	1	1	1.00
Stainless steel wire trader, 230 lbs, length of 8m (25ft)	1	2	2.00
Galvanized longline wire, size 26/7, of 40m (16 fath.)	1	3.00	3.00
Double hook, looped eye, tinned, size 2	2	0.15	0.30
" " " " " " 4	10	0.09	0.90
" " " " " " 6	10	0.07	1.05
Tuna hook, Cat. No. 508, size 40	2	0.21	0.42
BKN hook, size 36	30	0.04	1.20
" " " 32	30	0.03	0.90
Heavy swivel w/cork screw, size 7mm	10	0.14	1.40
Brass barrel swivel, size 1/10	10	0.03	0.30
Octopus lure bait only, No. 35, colour No.105	10	0.09	0.90
" " " " " 55 " " KR30	2	0.30	0.60
New Pearl Jig No. 6, head only size 13 mm.	5	0.49	2.45
" " " " " " " 10 mm	5	0.37	1.85
No. 22 Feather Jig, Head only, 6 oz.	1	1.55	1.55
Gaff. hook, stainless steel, 3 inches	1	2.90	2.90
Plier/Wire cutter	1	5.00	5.00
Tackle box	1	6.00	6.00
Jerry can, plastic, DAISHO brand, 18 litres w/pouring spout	2	6.00	12.00
Electric torch., SUNRISE	1	2.20	2.20
Shackle galvanised, D type, 14mm	1	1.10	1.10
Sinkers, 4 lbs lead	8	0.80	6.40
Anchor buoy	1	12.00	12.00
Thimble, galvanized	4	0.20	0.80
Anchor line, coil of 10 mm x 220 m, polypropylene	2	16.00	32.00
Anchor and galvanized wire 3,4 mm	2	6.00	12.00
Flare kit	1	12.00	12.00
Drum pump for petrol	1	7.50	7.50
Braided rope 4 mm, 15 fath.	1	1.00	1.00
Fishing reels	4	15.00	60.00
Raincoats	4	13.50	54.00
TOTAL		WS$	277.08

APPENDIX II

SPECIES CAUGHT ON BOTTOM HANDLINES

Based on records of 31,000 lb caught
by Fisheries Division in 1974-75-76

Samoan	English	Scientific	% of total
Malie	Shark		32.0
Palumalau	Sharptooth Snapper	Pristipomoides typus	14.8
Palusina	Rosy job fish	Aprion microlepus	11.1
Malai	Malabar red snapper	Lutjanus malabaricus	10.4
Filoa	Longface emperor	Lethrinadae	7.1
Palutalatala	Oil fish	Ruvettus pretiosus	4.7
Mu	Red snapper	Lutjanus bohar	4.6
Gatala	Grouper	Serranidae	4.5
Utu	Green job fish	Apruor virescens	2.1
Palukumuro	Snake mackerel	Promethichthys Prometheus	1.4
Palusega	Small toothed job fish	Aphareus furcatus	0.4
Others			5.4

(The scientific names are based on a preliminary determination.)

FIG. 1

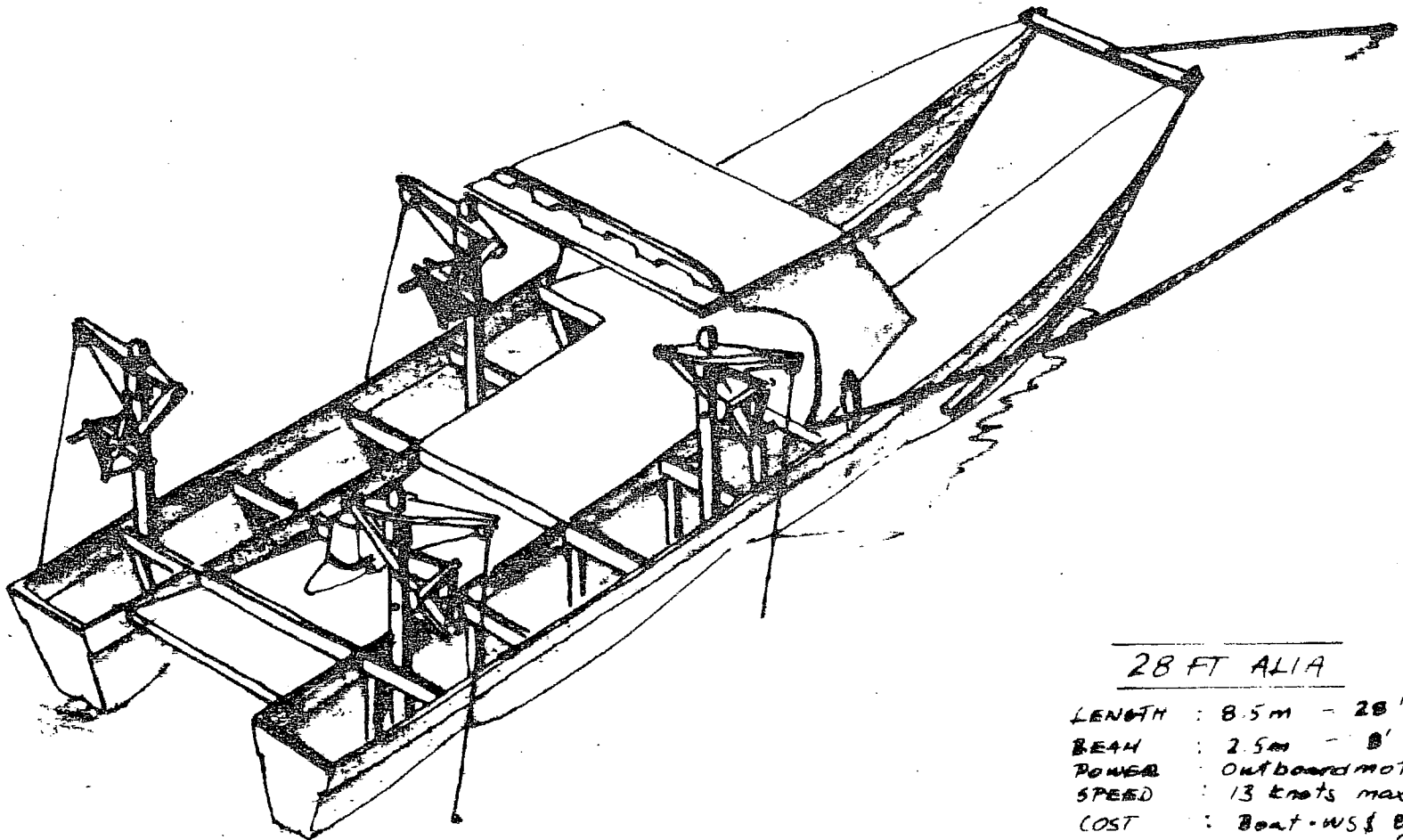

28 FT ALIA

LENGTH : 8.5m – 28' 0"
BEAM : 2.5m – 8' 2"
POWER : Outboard motor 25 hp
SPEED : 13 knots max
COST : Boat - WS $ 830
Engine 585 incl spare eng.
Gear 277
TOTAL WS $ 1692

FIG 2

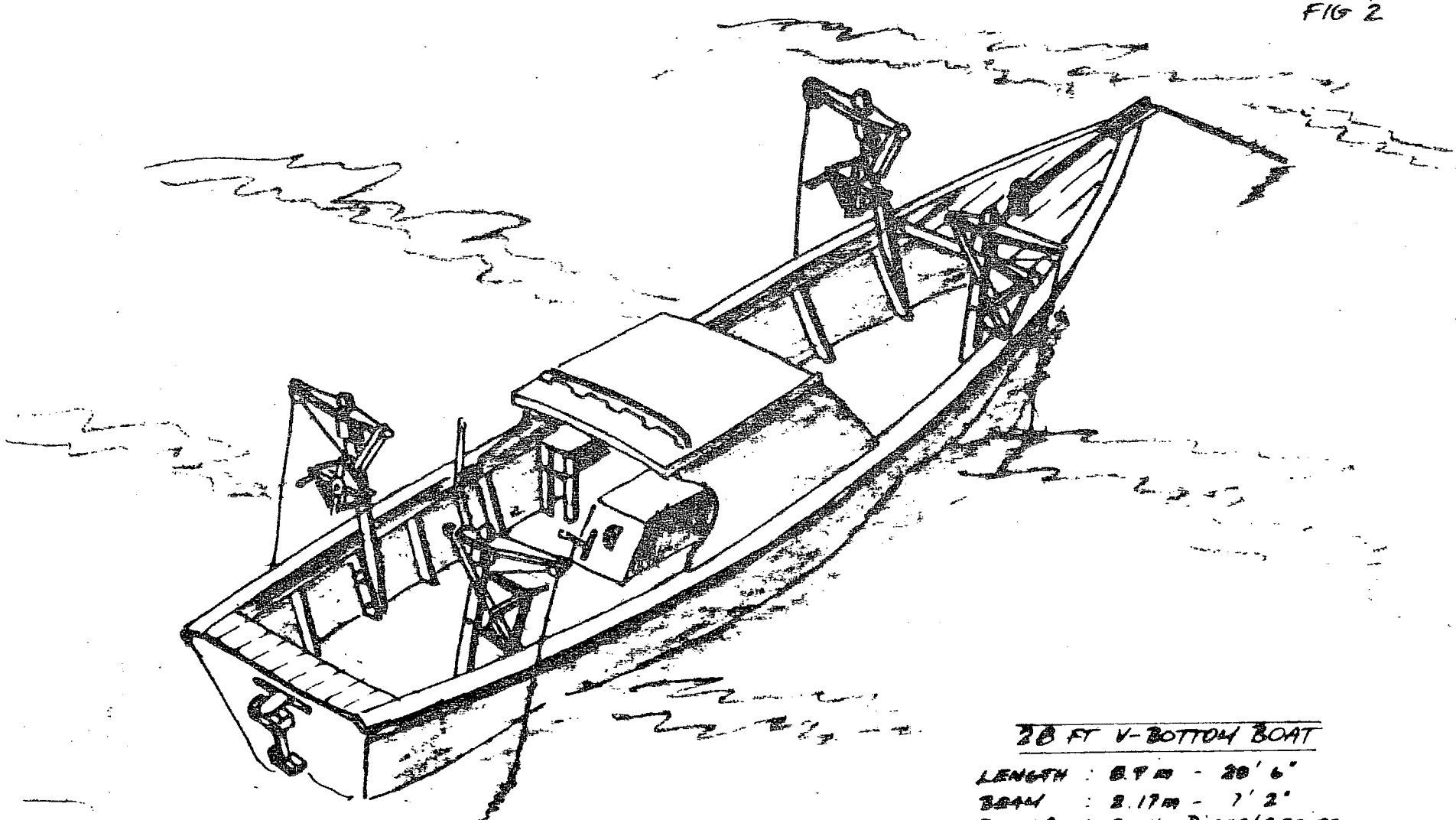

28 FT V-BOTTOM BOAT

LENGTH	8.7 m - 28' 6"
BEAM	2.17 m - 7' 2"
POWER	20 Hp Diesel engine
SPEED	9 Knots max
COST	Boat - US$ 1200
	Engine 1200
	Gear 277
	Total US$ 2677

TERMINAL RIG

	COST WS$
Mono 105kg (230lb), 500m (270 fath)	7.50
Heavy swivel w/corkscrew, size 7mm	0.14
Galv longlinewire, 26/7	0.10
BKN circle hook, size 36 or 32	0.12
sinker - 1,8 kg (4lb) of steel	0.50
TOTAL COST WS$	8.36

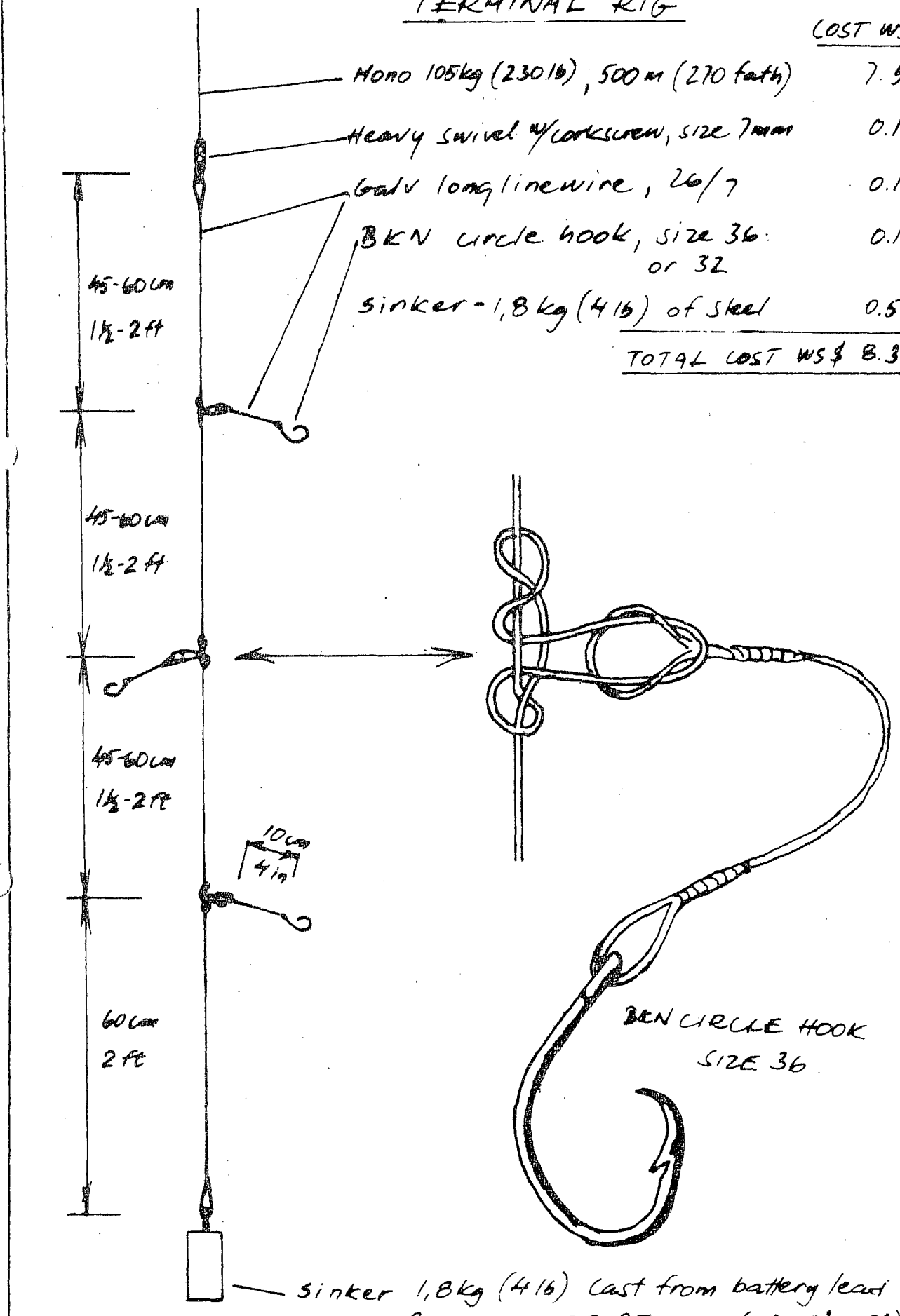

sinker 1,8kg (4lb) cast from battery lead or cut from iron 25x75x120 (1"x3"x5") eye welded on

FIG. 3.

FIG. 5

ANCHOR AND ANCHOR RETRIEVAL

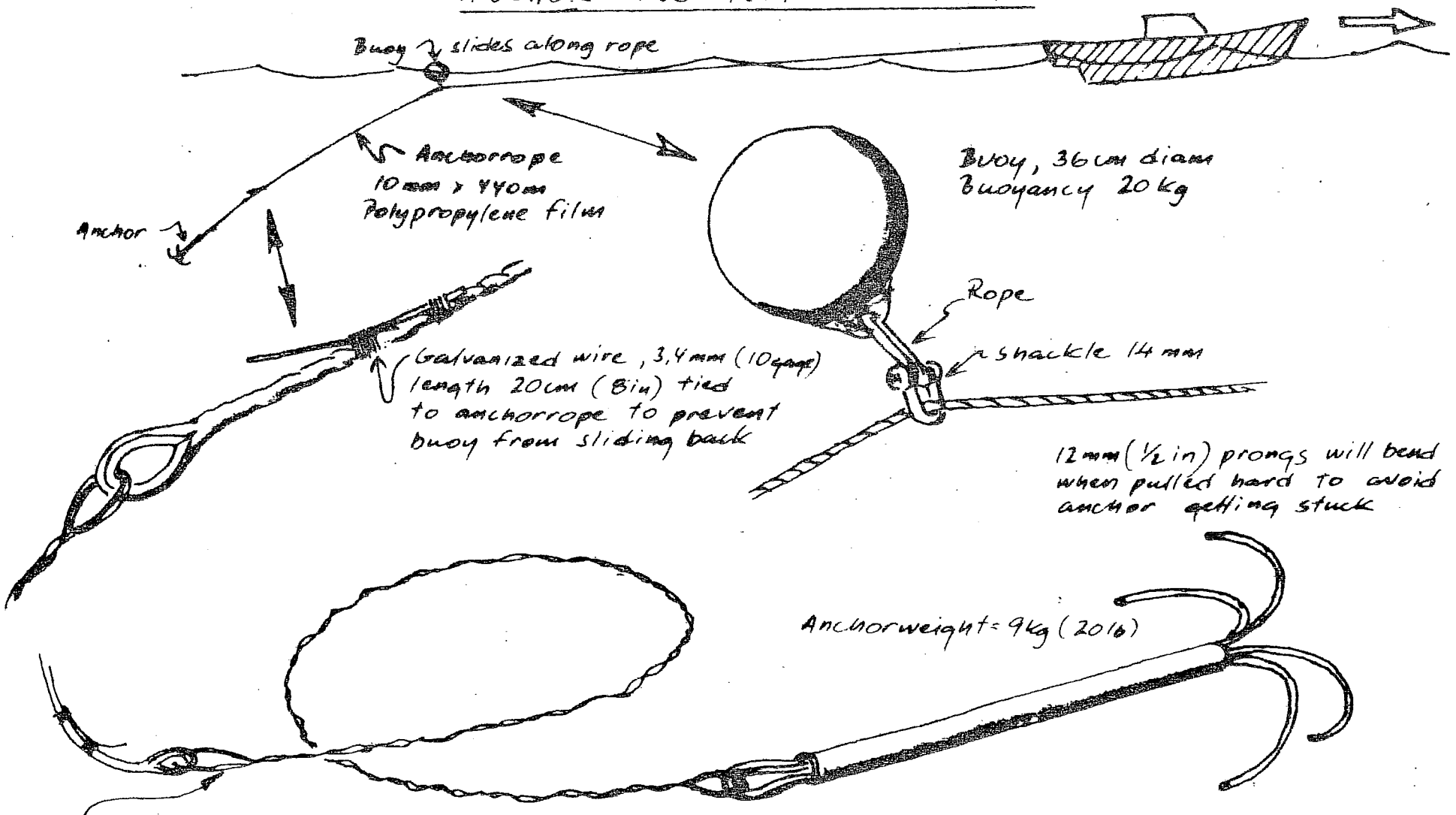

Galv. wire 3,4 mm (10 gage) in one length 9 m (4,5 fath.) doubled and twisted together to make 4 m (2 fath) cheaper than chain and less risk of snags in coials.

Anchor made of 1½ in galv. pipe, 760 mm (2½ ft) long 12 mm (½ in) plain roundiron in two lengths of 2,75 m (9 ft) are doubled over and inserted in the pipe and prongs bent back

ICEBOX FROM 200L (44 GAL) DRUM

NET VOLUME = 145 DM³

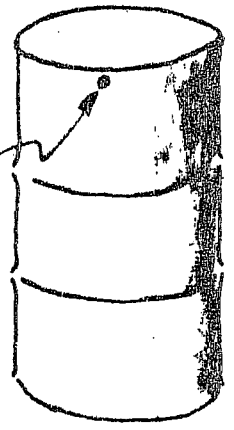

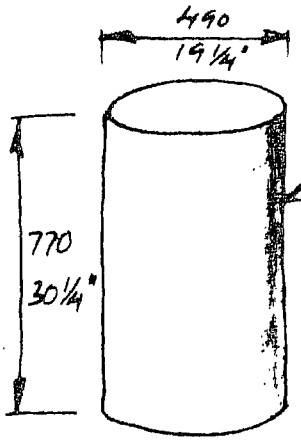

Place spaceblock 5cm (2in) in bottom of drum. Insert liner, mix polyurethane foam and pour evenly. Block liner firmly from rising

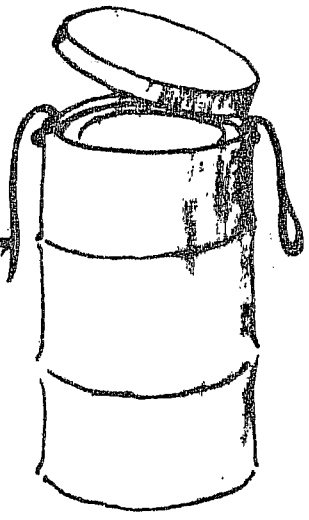

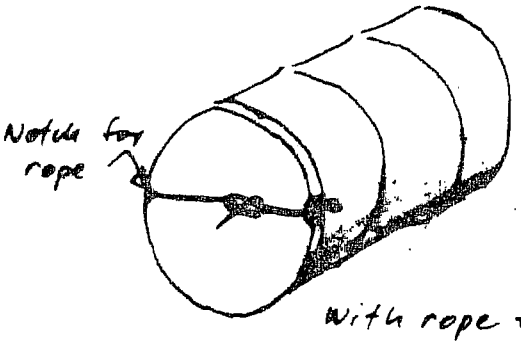

With rope tied over lid drum can be rolled

Two ways of making the lid:

Sawn from 19 x 90mm boards

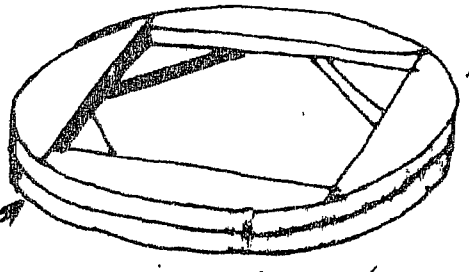

9mm marine plywood on each side

Laminated over form

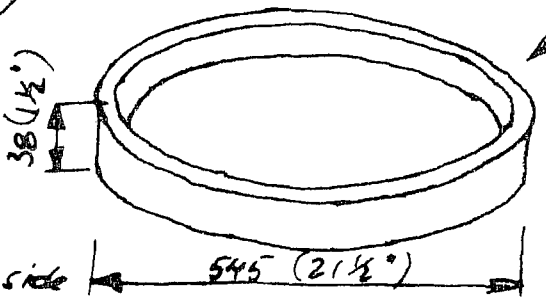

weight of empty container	38 kg (84 lb)
weight filled with flakeice	92 kg (207 lb)
weight of ice only	54 kg (118 lb)

36 kg (80 lb) ice will kool down and keep 36 kg (80 lb) fish for 4 days

FIG. 6

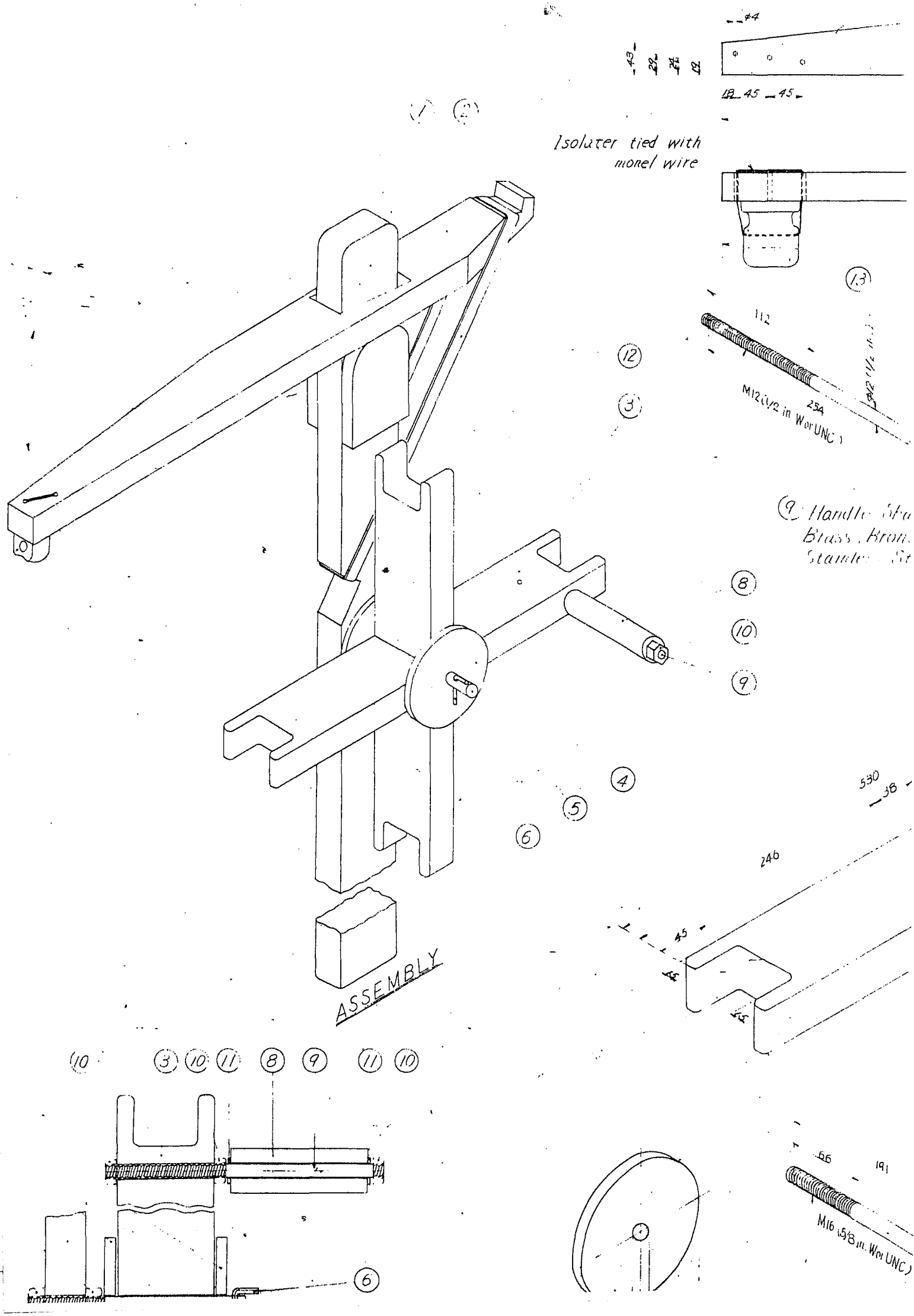
Isolater tied with monel wire
ASSEMBLY
M12 (1/2 in W or UNC)
M16 (5/8 in W or UNC)
45
45
246
530
38
254
112
66
191

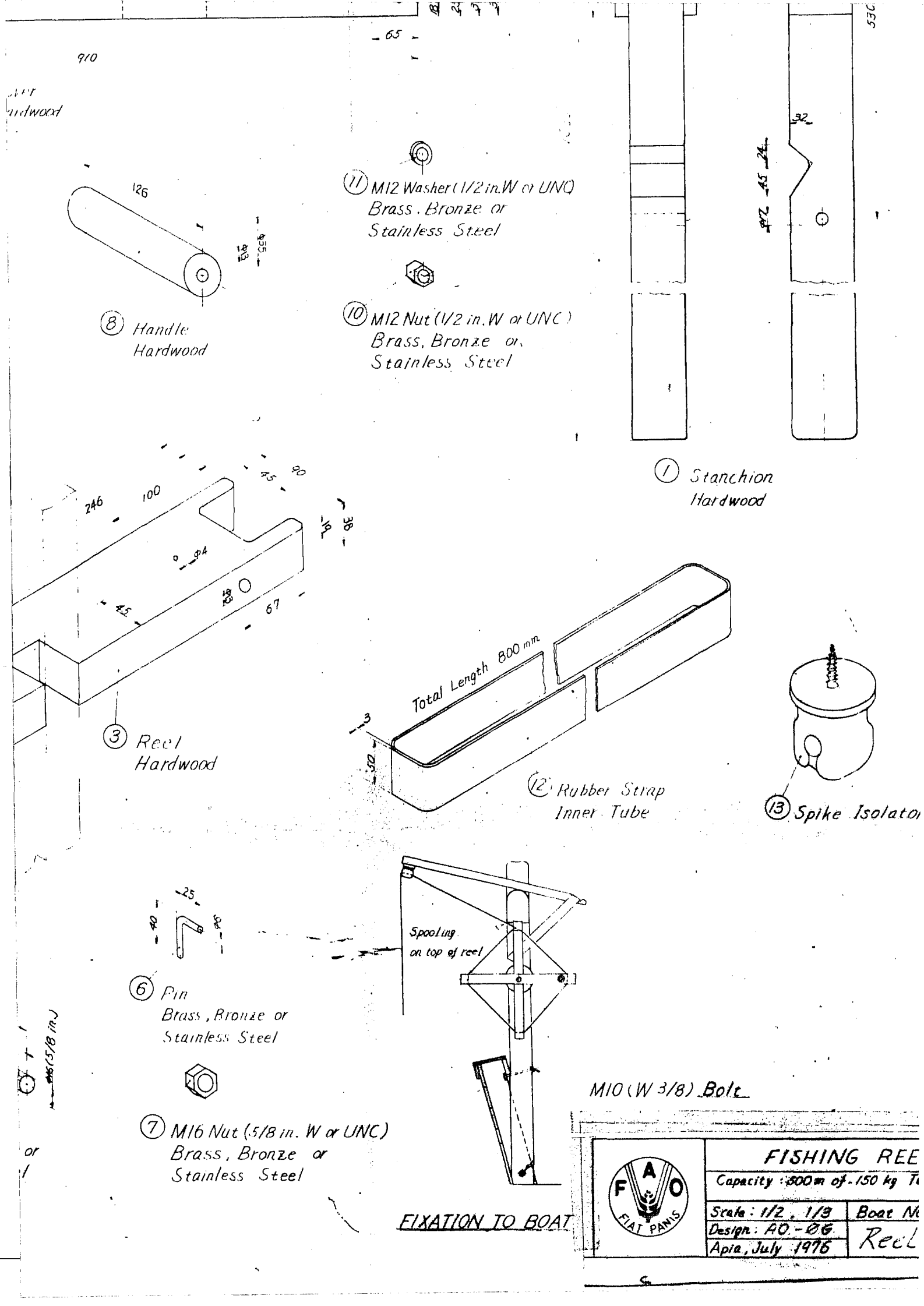
910
65
126
⑧ Handle
Hardwood
⑪ M12 Washer (1/2 in. W or UNC)
Brass, Bronze or
Stainless Steel
⑩ M12 Nut (1/2 in. W or UNC)
Brass, Bronze or
Stainless Steel
32
24
45
72
① Stanchion
Hardwood
246
100
45
90
38
19
67
③ Reel
Hardwood
Total Length 800 mm
3
50
⑫ Rubber Strap
Inner Tube
⑬ Spike Isolator
25
40
⑥ Pin
Brass, Bronze or
Stainless Steel
Spooling
on top of reel
⑦ M16 Nut (5/8 in. W or UNC)
Brass, Bronze or
Stainless Steel
M10 (W 3/8) Bolt
FIXATION TO BOAT
FAO
FIAT PANIS
FISHING REE
Capacity : 800 m of 150 kg T
Scale : 1/2 , 1/3
Boat N
Design : AO.-06
Apia, July 1976
Reel